SERIES L1E LADDER EXTENSION

HALLIDAY PRODUCTS
www.HallidayProducts.com
Phone 800-298-1027
Fax 407-298-4534
Sales@HallidayProducts.com

STANDARD FEATURES:

- EASY TO INSTALL ON ALUMINUM OR STAINLESS LADDERS
- SECURE LOCKING IN THE EXTENDED POSITION
- LIGHT WEIGHT OPERATION
- ALL ALUMINUM AND STAINLESS STEEL CONSTRUCTION
- ALSO AVAILABLE IN ALL TYPE 304 OR TYPE 316 S.STL.

MODEL	HEIGHT	ABOVE LADDER	MIN. TANK DEPT.
A	37" (940MM)	42" (1067MM)	73" (1854MM)
B	34" (864MM)	39" (991MM)	55" (1397MM)

INSTALLATION & OPERATION INSTRUCTIONS

Installation:

A) Place ladder flat on the ground with standoffs up.
B) Place 2" (52 mm) square aluminum tube in center of rungs with the "T" shaped slot below third rung as shown (Model A) or second rung (Model B).
C) Place stainless steel channel clamp over square aluminum tube so "U" clamp holes line up on either side of rungs as shown.
D) Insert stainless steel "U" bolts over rung and through holes in stainless steel channel clamp as shown.
E) Apply 10-15 foot pounds (1.3-2.1 kg./meter) of torque to all "U" bolt nuts.
F) Verify that square aluminum tube is secured to ladder rungs.

Operation:

A) To engage ladder extension, grasp aluminum post above the top stainless steel channel clamp, and pull straight up until lower stainless steel pin is seated.
B) Rotate aluminum post 1/4 turn in either direction to secure pin in slot as shown in Detail.

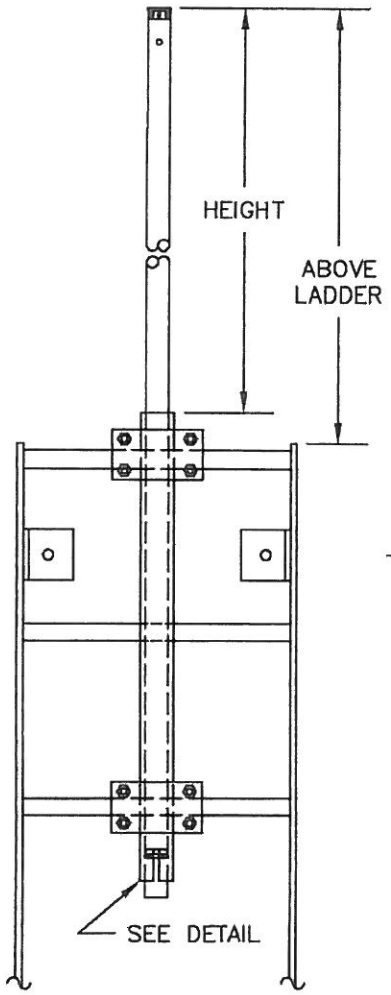

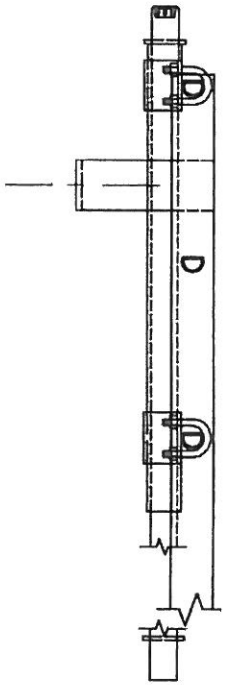

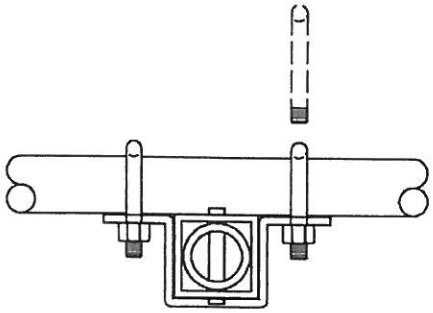

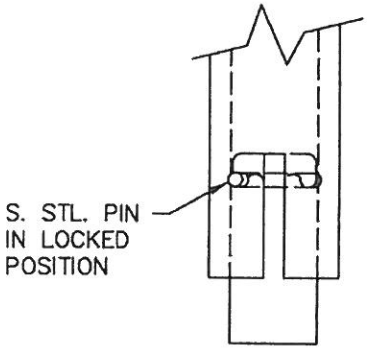

DETAIL

NOTES:
PIN MUST BE IN LOCKED POSITION PRIOR TO OPERATION.

SERIES L1B and L1D LADDERS

HALLIDAY PRODUCTS
www.HallidayProducts.com
Phone 800-298-1027
Fax 407-298-4534
Sales@HallidayProducts.com

STANDARD FEATURES:

- ALL ALUMINUM WELDED CONSTRUCTION
- 1 3/8" TYPE "D" RUNG WITH FLAT SLIP RESISTANT SURFACE
- CUSTOM FIT WALL MOUNTED STANDOFFS
- FLOOR AND WALL OR WALL-ONLY MOUNTING (SPECIFY)
- FLAT OR ROUND WALL MOUNTING (SPECIFY)
- AVAILABLE IN WELDED STAINLESS STEEL CONSTRUCTION

REQUIRED INFORMATION:

- BASIN DIAMETER OR FLAT WALL
- RAIL LENGTH IN FEET
- STANDOFF LENGTH (7" [178 MM] MIN.)
- L1B OR L1D MOUNTING

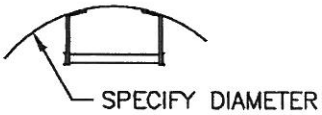

BASIN WALL MOUNTING

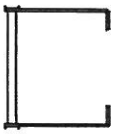

FLAT WALL MOUNTING

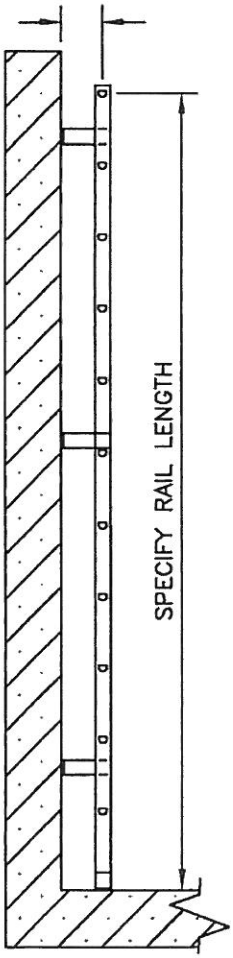

L1D (FLOOR AND WALL MOUNT)

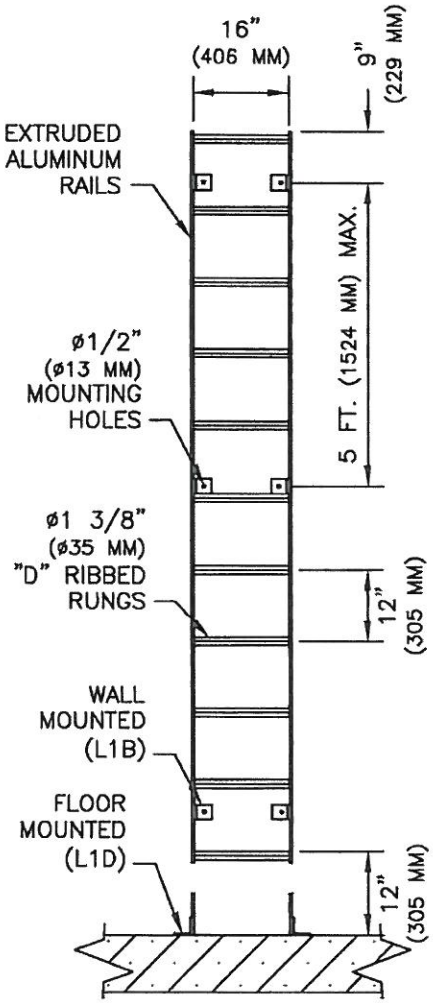

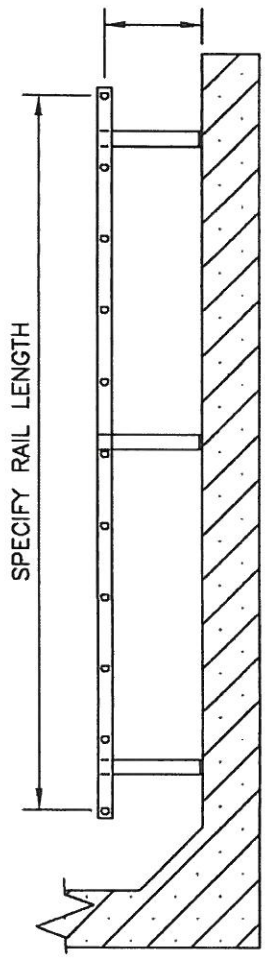

L1B (WALL MOUNT)

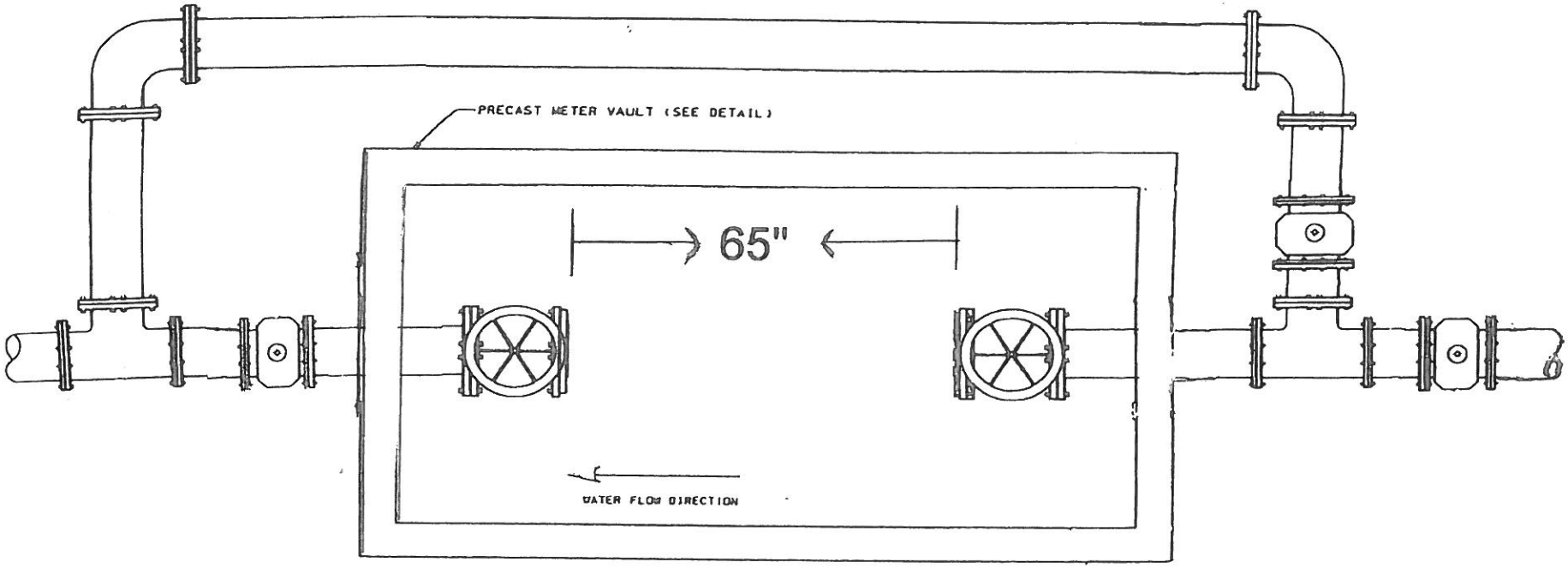

BYPASS FOR METER VAULT

CITY OF CARMEL STANDARDS

WATER VAULT – H-20 INCIDENTAL TRAFFIC LOAD RATED

STANDARD DRAWING

ACCESS DOOR

STANDARD FEATURES:

- AUTO-LOCK T-316 STAINLESS STEEL HOLD OPEN ARM WITH
- RELEASE HANDLE
- T-316 STAINLESS STEEL HINGES AND ATTACHING HARDWARE
- T-316 STAINLESS STEEL SLAM LOCK WITH REMOVABLE KEY
- STAINLESS STEEL COMPRESSION SPRING ASSIST
- DOUBLE LEAF CONSTRUCTION
- H20 LOAD RATING (SEE NOTES)
- EXTRUDED ALUMINUM FRAME
- RECESSED LIFTING HANDLE
- LIFETIME GUARANTEE

A DIM. INCHES (MM)	C DIM. INCHES (MM)	UNIT WT. LBS. (KG.)
72 (1829)	48 (1219)	305 (138)

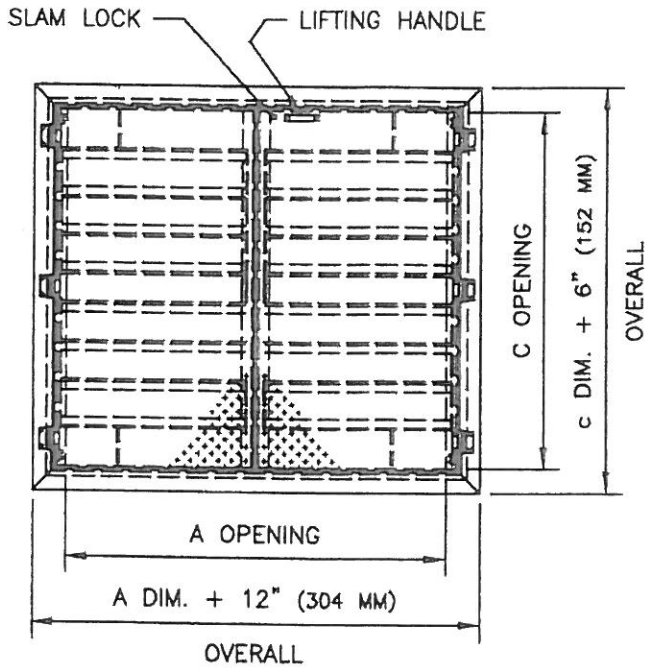

NOTES:

1) SUITABLE FOR USE IN OFF STREET LOCATION WHERE NOT SUBJECTED TO HIGH DENSITY TRAFFIC.

2) PROVIDE A FULL BED OF CLASS "A" CONCRETE UNDER FRAME AND SUPPORT ANGLES.

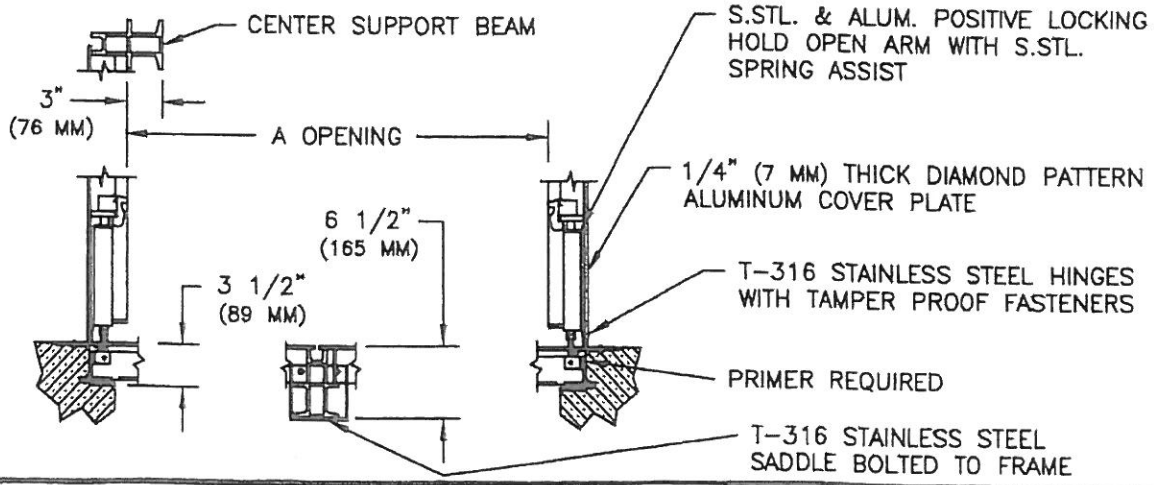

CITY OF CARMEL STANDARDS

STANDARD DRAWING

ACCESS DOOR H-20 INCIDENTAL TRAFFIC LOAD RATED

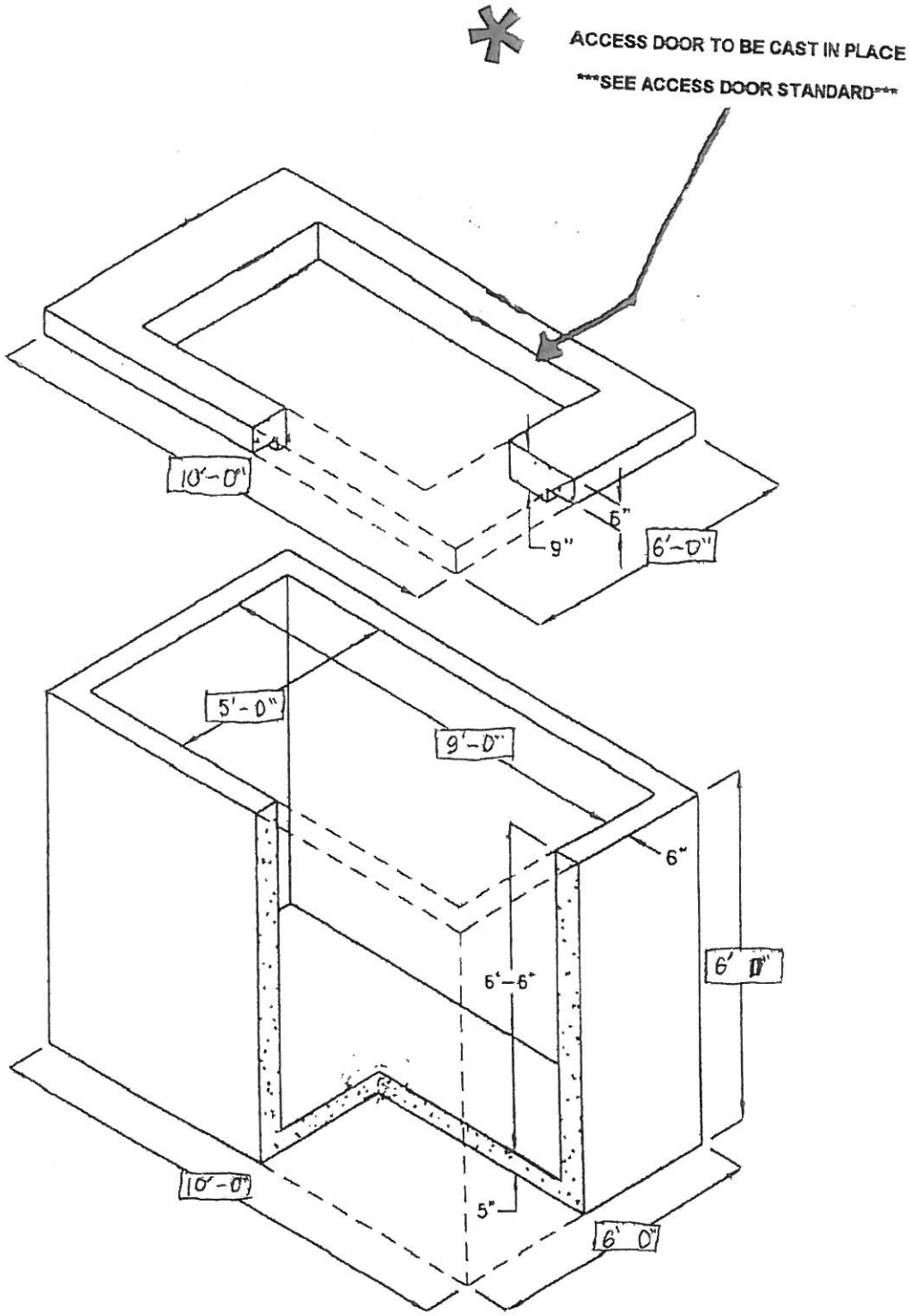

CITY OF CARMEL STANDARDS

STANDARD DRAWING

WATER VAULT – H-20 INCIDENTAL TRAFFIC LOAD RATED

OPERATING CHARACTERISTICS

Meter Size	Normal Operating Range @100% Accuracy (±1.5%)	AWWA Standard	Low Flow @95% Accuracy	Maximum Intermittent Flow Rate
4"	3/4 to 1200 US gpm 0.171 to 272.55 m³/h	2 to 700 US gpm 0.45 to 159 m³/h	3/8 US gpm 0.09 m³/h	1500 US gpm 340.7 m³/h
6"	1 1/2 to 2500 US gpm 0.34 to 567.81 m³/h	4 to 1600 US gpm 0.91 to 363 m³/h	3/4 US gpm 0.17 m³/h	3100 US gpm 704.1 m³/h
8"	2 to 4000 US gpm 0.45 to 908.5 m³/h	7 to 2800 US gpm 1.6 to 636 m³/h	1 US gpm 0.23 m³/h	5000 US gpm 1135.6 m³/h

DIMENSIONS

Meter Size	A in/mm	B in/mm	C in/mm	D in/mm	E in/mm	F in/mm	G in/mm	H in/mm	I in/mm	J in/mm	Weight lbs/kg
4"	33 838	10 254	10 3/4 273	17 1/2 445	22 559	15 1/4 387	6 3/4 171	12 305	2 51	2 51	215 98
6"	45 1143	11 1/16 281	11 3/8 289	21 1/4 540	29 737	19 1/2 495	9 1/2 241	16 406	2 51	3 76	570 258
8"	53 1346	11 13/16 300	13 29/64 342	25 7/8 657	34 1/4 870	21 3/4 552	12 1/2 318	17 432	3 76	3 76	765 347

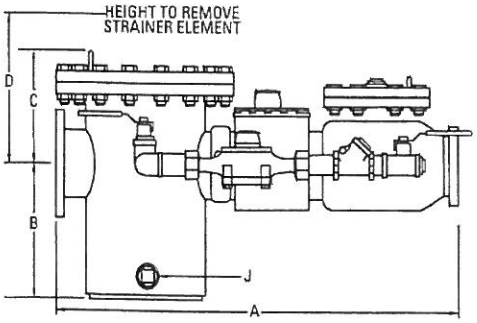

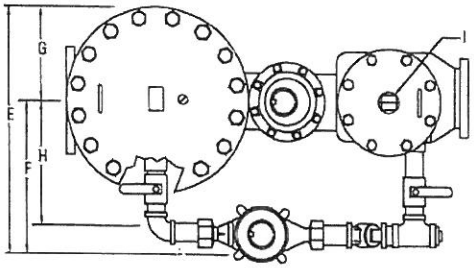

4", 6", & 8" meter specs for vault